CUSTOMER COPY

RoHS compliant

REVISION DATA				
SYM	ECN	DESCRIPTION	DATE	APPROVED

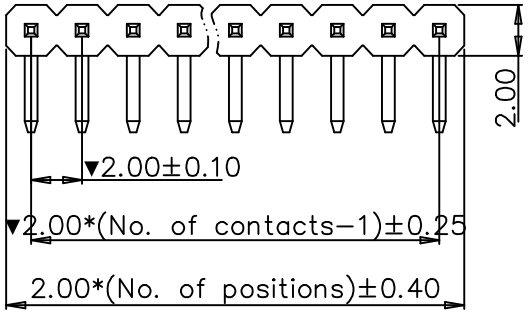

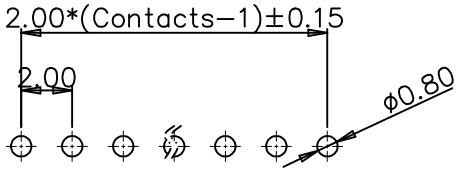

Recommended P.C.B Layout(±0.05)

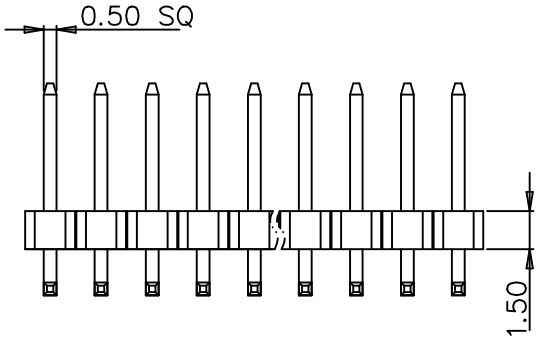

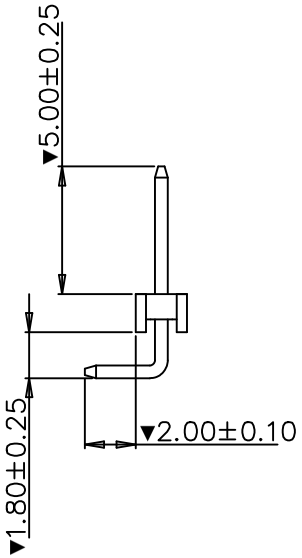

Ordering information

QFB1	15	1 - P	XX	X	X	A	47
	High Option: 15: H=1.50mm	Insulator Quantity: 1 1PC; 2 2PCS; 3 3PCS; ...	No. of Positions: 01~40	Plating Option: A G/F; B Au3μ"; C Au5μ"; D Au10μ"; H GF/Sn120μ"; S Sn120μ"; Z Special (Underline option is standard)	Insulator Material Option: A BK-PBT; F BK-LCP; G BK-PA9T; S Special (Underline option is standard)		Serial No.: 01~99

Packing	
1.General	√
2.Tape&Reel	
3.Tube	
4.Tray	
5.Other	

natconn ® 广东纳特康电子股份有限公司
GUANGDONG NATCONN ELECTRONIC CO.,LTD

TOLERANCE:	
ANGLE	±2°
X.XXX	±0.05
X.XX	±0.20
X.X	±0.30
X.	±0.50

PROJECTION		TITLE: Pitch2.00*H1.50 Pin Header Single Row Right Angle Type, A=2.00,B=5.00			
DATE	2019/02/19				
DRAWN	唐建平	CUSTOMER: N/A		CUSTOMER P/N: N/A	REV: N/A
CHECKED	雷邦军	PART NO.:		DRAWING NO.: QFB1151PA47	REV: A
APPROVED	冯显东	SIZE: A4	UNIT: mm	SCALE: 10:3	SHEET: 1/1