CUSTOMER COPY

RoHS compliant

REVISION DATA				
SYM	ECN	DESCRIPTION	DATE	APPROVED

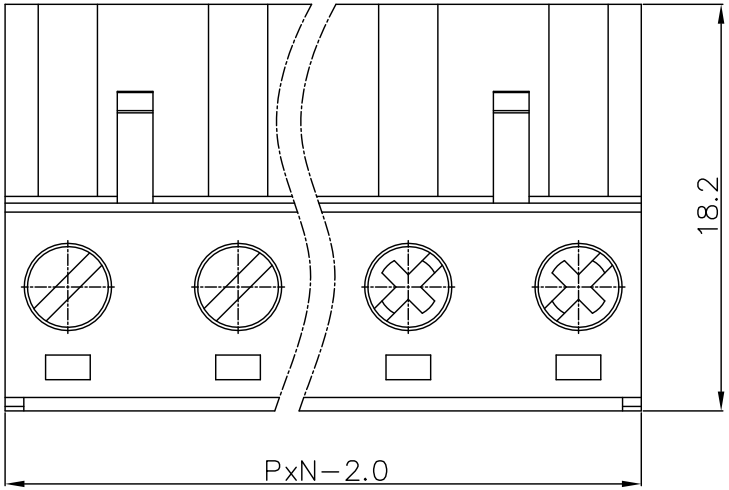

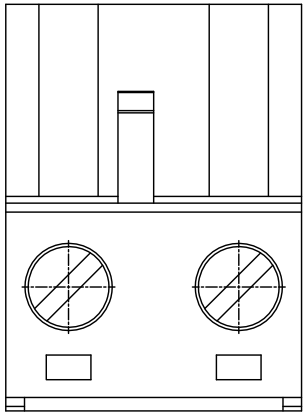

2 CONTACTS

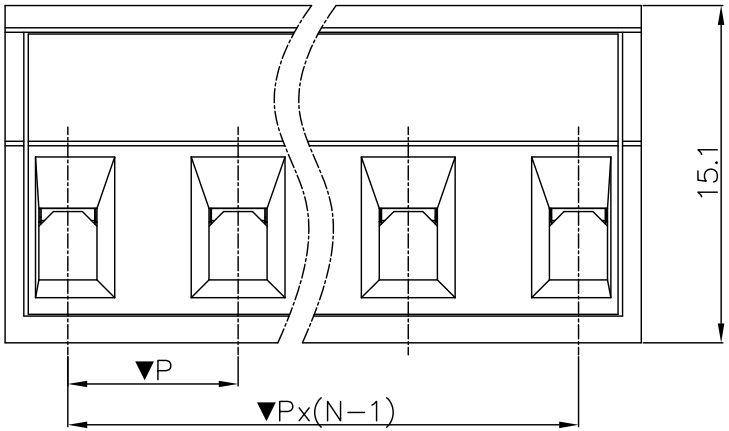

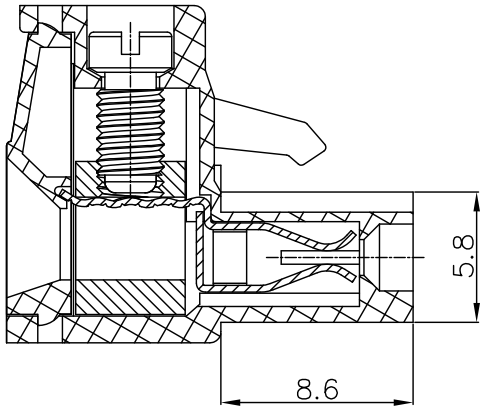

Technical Data

1.Material:
- Insulator:NY66,UL94V−0 RoHS
- Contact clamp:phosphor bronze,nickel plated
- Cage clamp:brass(CuZn),nickel plated
- Screw:steel M3,galvanized plated

2.Electrical:
- Current rating:15A
- Voltage rating:300V
- Contact resistance:≦20mΩ
- Insulation resistance:≧5000MΩ
- Withstanding Voltage:1600V AC/minute

3.Mechanical:
- Wire range:24~12AWG
- Screw torque:5Lb−in
- Wire strip length:7−8mm
- Operaing temperature:−40°C to+105°C

Safety approval:cULus,file No.:E355923

4.Critical Dimensions:▼

Ordering information

PJE	XX	X	X	X	0	X	00
	Number of contacts	Pitch	Screw & Clamp	Color	Body type	Mark	Serial No.

- Number of contacts: 02~16(pitch7.5/7.62) 02~08(pitch15.0/15.24) (Solid block)
- Pitch: A 7.5/.295" B 7.62/.30" L 15.0/.591" M 15.24/.60"
- Screw & Clamp: 0 "−/+" Combination type w/ brass machined clamp; 1 "−"Slot type w/ brass machined clamp
- Color: 0 Black 3 Orange 5 Green 6 Blue 8 Grey (Underline is standard)
- Body type: 0 Without flange
- Mark: 0 No mark 1 natconn 2 Customer 3 Others
- Serial No.: 00 Standard 01~99 Any special item by customer request

natconn® 广东纳特康电子股份有限公司
GUANGDONG NATCONN ELECTRONIC CO.,LTD

TOLERANCE:	PROJECTION		TITLE:			
ANGLE ±2°			PJE Terminal Block			
X.XXX ±0.01	DATE	2011/11/05				
X.XX ±0.25	DRAWN	Sullen	CUSTOMER: N/A	CUSTOMER P/N: N/A		REV: N/A
X.X ±0.35	CHECKED	唐建平	PART NO.:	DRAWING NO.: PJEXXXXX0X00		REV: A
X. ±0.50	APPROVED	冯显东	SIZE: A4	UNIT: mm	SCALE: 4:1	SHEET: 1/1