CUSTOMER COPY

RoHS compliant

REVISION DATA				
SYM	ECN	DESCRIPTION	DATE	APPROVED

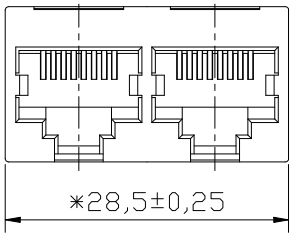

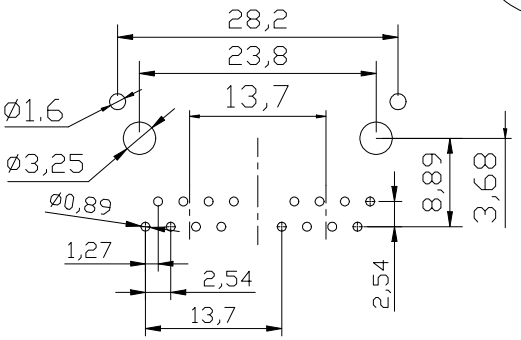

PC Board Layout
Component Side Shown

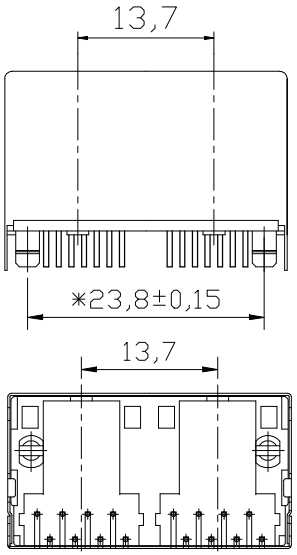

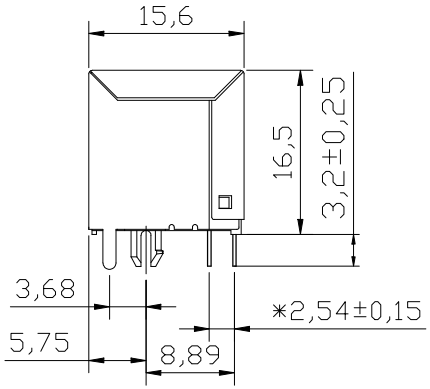

NOTES:

MATERIAL:

1.HOUSING MATERIAL :GLASS FILLED POLYESTER UL94V-0.
2.CONTACT MATERIAL :PHOSPHOR BRONZE t=0.30mm.
3.PLATING :SELECTING GOLD PLATING 3u"~50u"OVER NICKEL

ELECTRICAL:

1.VOLTAGE RATING:125 VAC RMS.
2.CURRENT RATING:1.5 AMP.
3.CONTACT RESISTANCE:30 MILLIOHMS MAX.
4.INSULATION RESISTANCE:500 MEGOHMS MIN @ 500V DC .
5.DIELECTRIC WITHSTANDING RESISTANCE :1000V AC RMS 50Hz. 1MIN.

MECHANICAL:

1.DURRABILITY: :750 CYCLES MIN.
2.PCB RETENTION PRE-SOLDER :1 LB MIN.

ENVIRONMENTAL:

1.STORAGE : -40°C TO 85°C.
2.OPERATION : 0°C TO 70°C.

RJ08 - XX A X - 124

Contact Plating	Layer	Housing Colour	Serial NO.
2 Gold Flash 4 Gold 3μ" 5 Gold 6μ" 6 Gold 10μ" 7 Gold 15μ" A Gold 30μ"	A One B Two	B Black N Beige W White Y Yellow	01~999

natconn® 广东纳特康电子股份有限公司
GUANGDONG NATCONN ELECTRONIC CO.,LTD

TOLERANCE:	PROJECTION		TITLE: RJ45 双胞			
ANGLE ±2°	DATE	2016/01/16				
X.XXX ±0.01	DRAWN	卢哲	CUSTOMER: N/A	CUSTOMER P/N: N/A		REV: N/A
X.XX ±0.25	CHECKED	雷邦军	PART NO.:	DRAWING NO.: RJ08-XXXX-124		REV: A
X.X ±0.35	APPROVED	冯显东	SIZE: A4	UNIT: mm	SCALE: 1:1	SHEET: 1/1
X. ±0.50						