CUSTOMER COPY

RoHS compliant

REVISION DATA				
SYM	ECN	DESCRIPTION	DATE	APPROVED

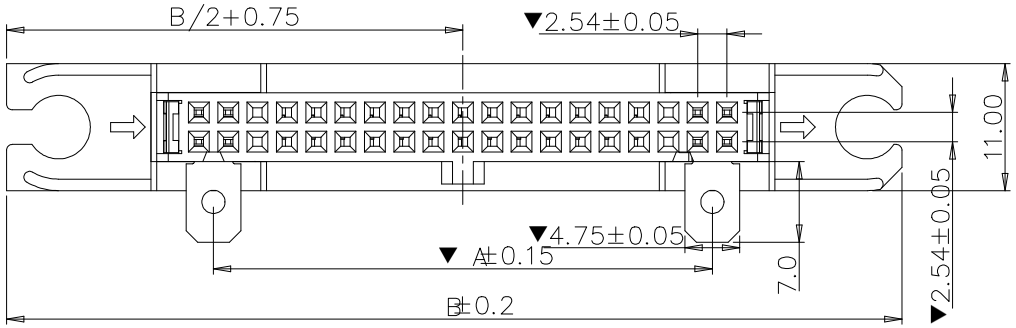

Technical Data

Current rating:	3Amps(for Power) 1Amps(for Signal)
Contact resistance:	20mΩ max.
Insulation resistance:	1000MΩ min. at 250V
Withstanding Voltage:	500V AC/minute
Operating temperature:	−40°C to+105°C
Soldering temperature:	245°C±5° 5S
Critical Dimensions:▼	

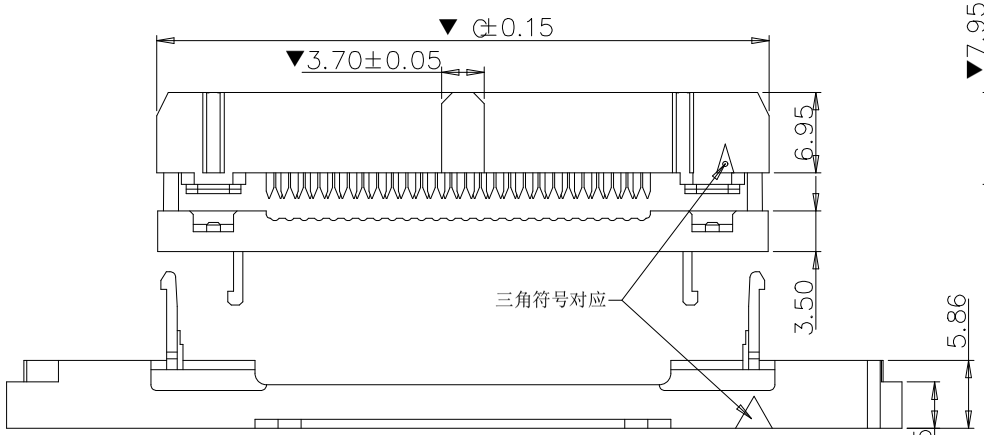

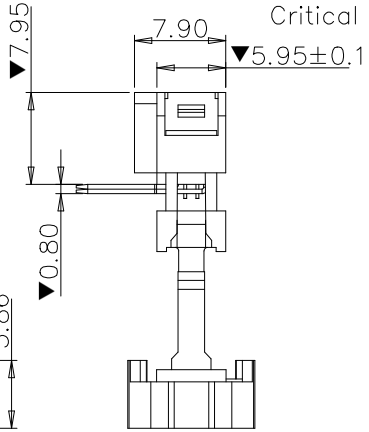

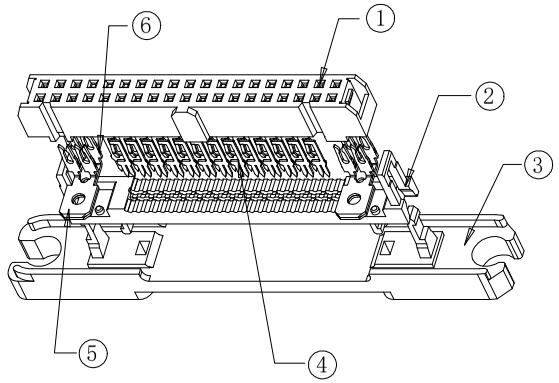

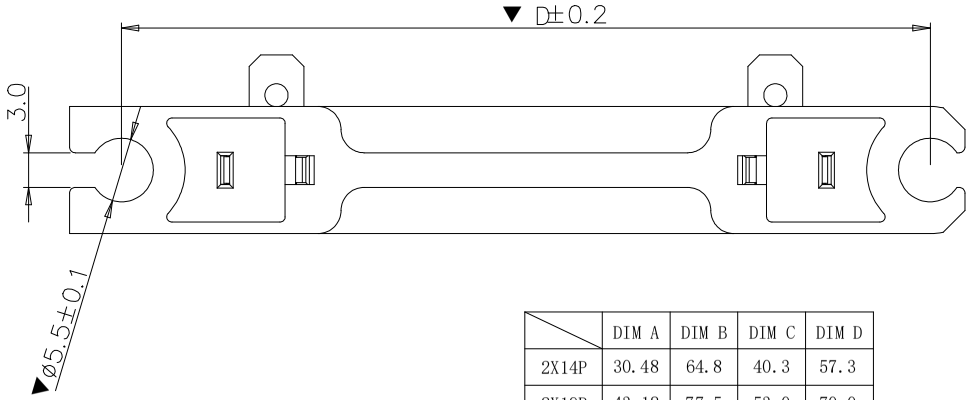

	DIM A	DIM B	DIM C	DIM D
2X14P	30.48	64.8	40.3	57.3
2X19P	43.18	77.5	53.0	70.0

序号	品名/描述	数量	材质	电镀	备注
6	电源短端子	2	C2680	镍底50u″ 半金锡	
5	电源长端子	2	C2680	镍底50u″ 半金锡	
4	信号端子	26/16	C2680	镍底50u″ 半金镍	
3	塑胶压线板	1	PA66+30%G.F		
2	塑胶中盖	1	PA66+30%G.F		
1	塑胶主体	1	PBT+30%G.F		

natconn® 广东纳特康电子股份有限公司
GUANGDONG NATCONN ELECTRONIC CO.,LTD

TOLERANCE:	PROJECTION		TITLE: 2.54mm IDC POWER/同向/W8.0			
ANGLE ±2°	DATE	2021/11/09				
X.XXX ±0.05	DRAWN	莫健勇	CUSTOMER: N/A	CUSTOMER P/N: N/A		REV: N/A
X.XX ±0.25	CHECKED	冯显东	PART NO.:	DRAWING NO.: IDCHEXX-A01X-39		REV: A
X.X ±0.35	APPROVED		SIZE: A4	UNIT: mm	SCALE: 1:1	SHEET: 1/1
X. ±0.50						